STD2 (Standard 2) Series

Unheated
Model Lengths: 36”–144”
Environmental Separation (up to 12’)
Insect Control (up to 10’)

atmosphere is everything
14716 S. BROADWAY, GARDENA, CA 90248 ● Ph: (310)532-1555 ● Fax: (310)-532-3030 ● www.marsair.com
© Copyright Mars Air Systems, LLC 2014

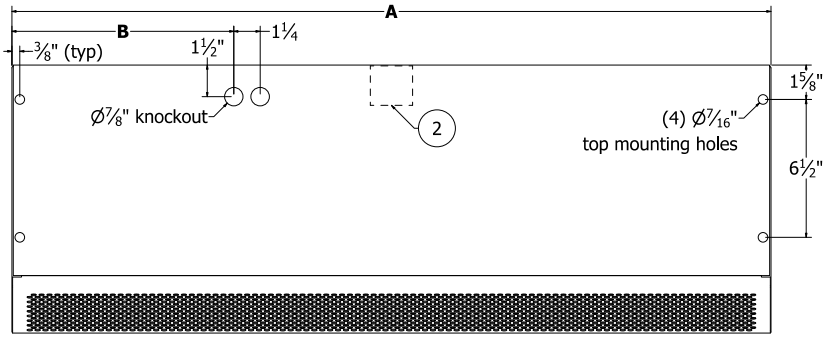

TOP VIEW

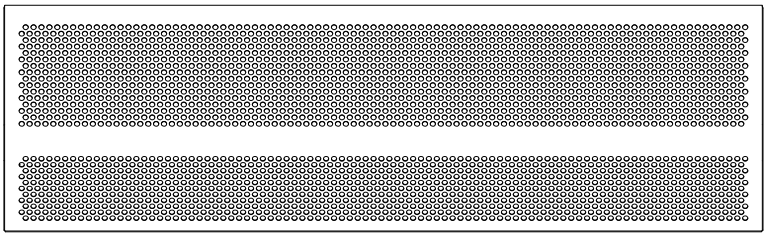

FRONT VIEW

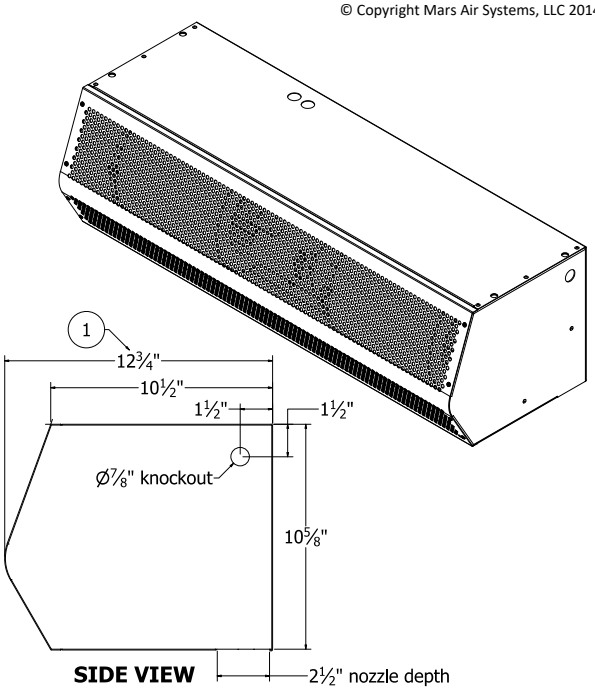

SIDE VIEW

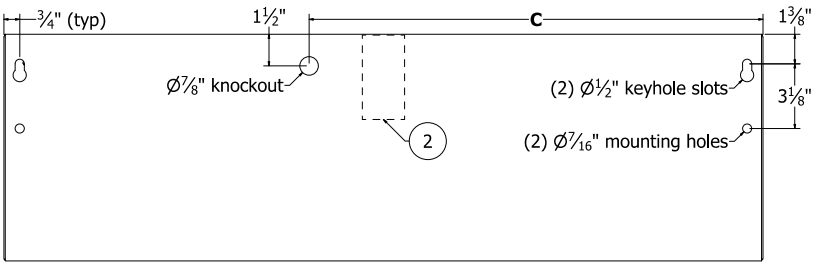

REAR VIEW

Notes:

1. Overall depth is 17 1/4” for STD2 units with SimpleLink option.
2. Internal junction boxes provided for electrical wiring: (1) 2”x4” box for one-motor units, (1) 4”x4” box for two-motor units, (2) 4”x4” box for three-motor units.
3. Recommended service clearances are 2” to the left and right sides, 6” on top, and 18” in front of the unit.
4. Circuit protection (per NEC) to be installed by others.
5. To prevent accidental damage during operation, unit must be installed so that the bottom of the air curtain does not extend below the door header.
6. Unit can be fastened to wall on both ends without intermediate support.
7. One-motor units up to 48” are shipped with Motor-Fan Assembly (MFA) factory-installed. All other models’ MFAs are shipped loose to minimize freight damage.

Model Number	Mechanical Data						AMCA Certified Lab Data				
	Overall Length A (in)	Nozzle Length (in)	Top Knockout Location B (in)	Rear Knockout Location C (in)	Motor (hp)	Weight (lb)	Max Core Velocity at Nozzle (fpm)	Avg Velocity (fpm)	Volume (cfm)	Uniformity (%)	Power Rating (watt)
☐ STD236-1U*-OB	36	36	10 ½	21 ½	½	60	5960	2206	1379	84	500
☐ STD240-1U*-OB †	40	40	12 ½	23 ½	½	65	4660	2084	1447	92	523
☐ STD242-1U*-OB	42	42	13 ½	24 ½	½	65	4865	1945	1418	87	506
☐ STD248-1U*-OB	48	48	16 ½	27 ½	½	70	4247	1730	1442	85	549
☐ STD272-2U*-OB	72	72	31 ½	40 ½	(2) ½	120	5960	2206	2758	84	1000
☐ STD284-2U*-OB	84	84	37 ½	46 ½	(2) ½	125	4865	1945	2836	87	1012
☐ STD296-2U*-OB	96	96	43 ½	52 ½	(2) ½	135	4247	1730	2884	85	1098
☐ STD2108-3U*-OB	108	108	31 ½	40 ½	(3) ½	175	5960	2206	4137	84	1500
☐ STD2120-3U*-OB	120	120	35 ½	44 ½	(3) ½	185	4660	2084	4341	92	1569
☐ STD2144-3U*-OB	144	144	43 ½	52 ½	(3) ½	200	4247	1730	4326	85	1647
The following model is not licensed to bear the AMCA seal											
☐ STD260-2U*-OB	60	60	9 ½	12 ½	(2) ½	90	6000	2633	2743	93	951

*** – Use corresponding letters in “Electrical Data” column headers (see page 2) to complete the model numbers.**

Note: above data is for 60 Hz at 1725 RPM. For 50 Hz, RPM is 1425 with a 17% reduction in performance.

- *The AMCA Certified Ratings Seal applies to airflow rate, average outlet velocity, outlet velocity uniformity, velocity projection, and power rating at free delivery only.*

† *Limited availability, long lead times may apply.*

NOTE: Mars Air Systems, LLC reserves the right to change specifications and product design without notice. Such revisions do not entitle the buyer to corresponding changes, improvements, additions, or replacements for previously purchased equipment.

STD2 (Standard 2) Series

Unheated
Model Lengths: 36”–144”
Environmental Separation (up to 12’)
Insect Control (up to 10’)

atmosphere is everything
14716 S. BROADWAY, GARDENA, CA 90248 ● Ph: (310)532-1555 ● Fax: (310)-532-3030 ● www.marsair.com
© Copyright Mars Air Systems, LLC 2014

Standard Features:

- ETL-certified to conform to UL 507 (US) and CSA 22.2 (Canada) standards, for indoor/outdoor use
- AMCA-certified to AMCA 211 (includes performance testing per AMCA 220)
  - Certified models are approved for use as alternate to vestibules (per ASHRAE 90.1, IECC, and IgCC)
- Sleek self-contained one-piece heavy-gauge corrosion-proof paint lock metal design
- Fire retardant and rust preventative electrostatic polyurethane powder coating
  - Standard color is Obsidian Black (OB)
- ½ HP continuous duty Totally Enclosed Air Over (TEAO) motors (NEMA 1)
- Adjustable air directional vanes with 40° sweep front to back
- 5-year parts warranty
- Freight included (FOB continental USA)
- Proudly made in the USA

Electrical Data Full Load Amp (FLA)	Unit Amperage (Voltage Code)			
	Single Phase		Three Phase	
	115V/1Ø ☐ (A)	208-230V/1Ø ☐ (D)	208-230V/3Ø ☐ (G)	460V/3Ø ☐ (H)
☐ STD236-1U*-OB	5.1	2.5	1.8/1.6	0.8
☐ STD240-1U*-OB †	5.1	2.5	1.8/1.6	0.8
☐ STD242-1U*-OB	5.1	2.5	1.8/1.6	0.8
☐ STD248-1U*-OB	5.1	2.5	1.8/1.6	0.8
☐ STD260-2U*-OB	10.2	5.0	3.6/3.2	1.6
☐ STD272-2U*-OB	10.2	5.0	3.6/3.2	1.6
☐ STD284-2U*-OB	10.2	5.0	3.6/3.2	1.6
☐ STD296-2U*-OB	10.2	5.0	3.6/3.2	1.6
☐ STD2108-3U*-OB	15.3	7.5	5.4/4.8	2.4
☐ STD2120-3U*-OB	15.3	7.5	5.4/4.8	2.4
☐ STD2144-3U*-OB	15.3	7.5	5.4/4.8	2.4

* – Use corresponding letters in “Voltage Code” column headers to complete the model numbers
† - Limited availability, long lead times may apply.

Ampacity (MCA) = total FLA x 1.25

Alternate voltage codes with FLA data:
·277V/1Ø/60Hz (L) – 2.7A per motor
·220V/1Ø/50Hz (U) – 2.5A per motor
·380-415V/3Ø/50Hz (W) – 1.1A per motor

Washdown motor FLA data (INS-WD-STD2):
·115V/1Ø/60Hz (A) – 7.4A per motor
·208-230V/1Ø/60Hz (D) – 3.9/3.7A per motor
·208-230V/3Ø/60Hz (G) – 2.0/2.1A per motor
·460V/3Ø/60Hz (H) – 1.0A per motor

Explosion proof motor FLA data (INS-XP-STD2):
·115V/1Ø/60Hz (A) – 7.4A per motor
·208-230V/1Ø/60Hz (D) – 3.7A per motor
·208-230V/3Ø/60Hz (G) – 1.8/1.6A per motor
·460V/3Ø/60Hz (H) – 0.8A per motor

Mars Recommended Accessories (see catalog for complete listing):

- Door Limit Switches (§)
  - ☐ 99-014, Combination mechanical switch, 250V, 1HP Max
  - ☐ 99-125, Industrial surface mounted magnetic switch (controller required)
- Controllers
  - ☐ MCPA-†U*, Motor Control Panel, 120V control voltage († = # of Motors, * = Voltage Code) (§)
    - ☐ MCP-TD, Adjustable time delay, 1sec-100hr (panel required)
    - ☐ MCP-24V, Low voltage control option (panel required)
    - ☐ BMS-303, BMS for monitor and control (panel with MCP-24V required)
      Note: *Dry contact provided in panel for monitoring motor. 24Vac signal provided from panel for controlling motor.*
  - ☐ SK-UU, SimpleLink, 115V-230V, 1PH, 2Mtr & 1HP max, Integral Control, NEMA 1, requires protection from direct elements for outdoor use (housing depth will be 17 3/8” deep)
- Brackets (§)
  - ☐ B0004, Adjustable mounting bracket set, 3½” clearance
  - ☐ B0005, Adjustable mounting bracket set, 7”–13” clearance
  - ☐ B0041, Transom mounting bracket set for STD2
- Filters
  - ☐ J21‡-†, ¼” aluminum pressed frame bank filters (‡ = Model Length, † = # of Motors)
- Severe Duty and Finish
  - ☐ HSG-304SS-STD, 304 Stainless steel housing construction
  - ☐ INS-WD-STD2, Washdown motor fan assembly, IP54
  - ☐ INS-XP-STD2, Explosion resistant motor fan assembly, Class 1, Division 1, Group D (TENV)
    Note: *Washdown and explosion proof units draw higher motor amperage (see electrical data table). Control panels for these units require OL/MP with higher amperage range (use MCP-MWD or MCP-MXP accessory).*
    Units are built with Explosion-Proof rated motors and spark-resistant aluminum blower wheels to comply with requirements for Spark Resistant Construction (SRC) in Class I, Division 1, Group D applications. Final installation must comply with all local NEC/NFPA codes.

(§) = Shipped loose

AMCA Certified Projection Velocity		
Model	Distance from Nozzle (in)	Average Core Velocity (fpm)
STD236-1U*	40	1207
	80	856
	120	710
	160	637
	200	588

EXAMPLE

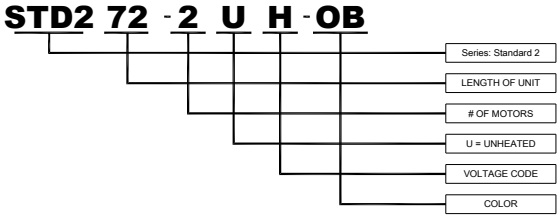

Sound Levels (measured at 10’ in a free field):

1 Motor Unit = 66 dBA, 2 Motor Unit = 68 dBA, 3 Motor Unit = 71 dBA, 4 Motor Unit = 73 dBA

MARS Air Systems, LLC certifies that the Air Curtains shown on this data sheet are licensed to bear the AMCA seal. The ratings shown are based on tests and procedures performed in accordance with AMCA Publication 211 and comply with the requirements of the AMCA Certified Ratings Program.

The AMCA Certified Ratings Seal applies to airflow rate, average outlet velocity, outlet velocity uniformity, velocity projection and power rating at free delivery only.

NOTE: Model STD260-2 is not AMCA-certified.

Intertek

NOTE: Mars Air Systems, LLC reserves the right to change specifications and product design without notice. Such revisions do not entitle the buyer to corresponding changes, improvements, additions, or replacements for previously purchased equipment.